TEMPERATURE SENSOR

T-200C

Applications:

Temperature sensor for measurement in blast-furnaces, boiler rooms, laboratories.

Technical Data

Measuring range	
T-200C-S	up to 1300°C (1600°C)
Measuring insert	PtRh10-Pt up to PN-EN 60584
Measuring range	
T-200C-B	up to 800°C
Measuring insert	PtRh30-Pt (B) up to PN-EN 60584
	others (K,J,L,R,T,E,N) IEC 584
Protection tube material	ceramics 799
Terminal head ambient temperature	100°C or 150°C
With transmitter	P - table of transmitters

Ordering code

[ ] - T - 200C - [ ] - [ ] - [ ] - [ ] - [ ] - [ ] - [ ] - [ ]

Transmitter
up to table — e.g. P1

Insert design
single — no signs
double - 2

Thermocouple type
PtRh10-Pt (S) — S
others (B,R,K,J,L,T,E,N))

Thermocouple wire diameter
⌀ 0,35 mm - 1 — 1
⌀ 0,5 mm - 2

Terminal head type
B, DA, NA — e.g. NA

Protection tube diameter d
⌀ 10 mm
⌀ 15 mm — 15
others

Protection tube length Lc
500 mm — 500
others

Steel piece length L
150 mm — 150
others

Tolerance
class 1, 2 — e.g. 2

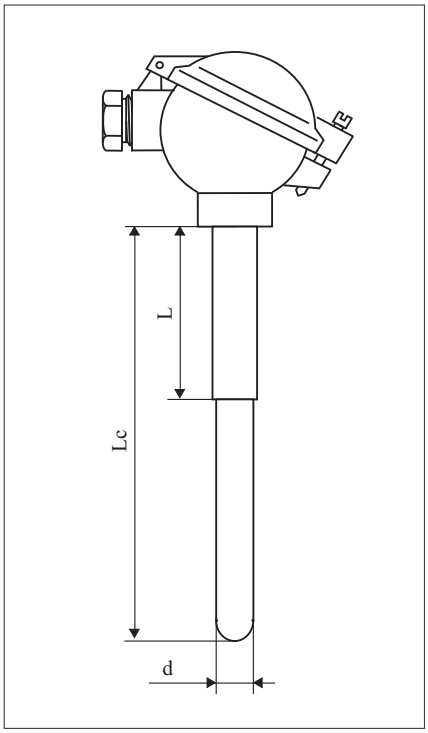

Order example:

T-200C-S-1-NA-15-500-150-2- single thermocouple type S, thermocouple wire dia. 0,35 mm, terminal head NA, ceramic tube diameter d=21,3, lenght Lc=500 mm, steel piece length L=150, class 2.

TERMO-PRECYZJA, ul. Krupnicza 7, Wrocław 50-075, tel./fax. (071) 342-69-48, 78-27-400,
www.termo-precyzja.com.pl, e-mail: biuro@termo-precyzja.com.pl